±1 *g* to ±5 *g* Single Chip Accelerometer with Signal Conditioning

ADXL05*

FEATURES
5 milli-*g* Resolution
Noise Level 12× Less than the ADXL50
User Selectable Full Scale from ±1 *g* to ±5 *g*
Output Scale Selectable from 200 mV/*g* to 1 V/*g*
Complete Acceleration Measurement System on a Single Chip IC
Self Test on Digital Command
+5 V Single Supply Operation
1000 *g* Shock Survival

APPLICATIONS
Low Cost Sensor for Vibration Measurement
Tilt Sensing with Faster Response than Electrolytic or Mercury Sensors
More Sensitive Alarms and Motion Detectors
Affordable Inertial Sensing of Velocity and Position

GENERAL DESCRIPTION

The ADXL05 is a complete acceleration measurement system on a single monolithic IC. The ADXL05 will measure accelerations with full-scale ranges of ±5 g to ±1 g or less. Typical noise floor is 500 μg/√Hz, (12× less than the ADXL50), allowing signals below 5 milli-g to be resolved. The ADXL05 is a force balanced capacitive accelerometer with the capability to measure both ac accelerations (typical of vibration) or dc accelerations (such as inertial force or gravity). Three external capacitors and a +5 volt regulated power supply are all that is required to measure accelerations up to ±5 g. Three resistors are used to configure the output buffer amplifier to set scale factors from 200 mV/g to 1 V/g. External capacitors may be added to the resistor network to provide 1 or 2 poles of filtering. No additional active components are required to interface directly to most analog to digital converters (ADCs).

The device features a TTL compatible self-test function that can electrostatically deflect the sensor beam at any time to verify that the sensor and its electronics are functioning correctly.

The ADXL05 is available in a hermetic 10-pin TO-100 metal can, specified over the 0°C to +70°C commercial, and –40°C to +85°C industrial temperature ranges. Contact factory for availability of automotive grade devices.

FUNCTIONAL BLOCK DIAGRAM

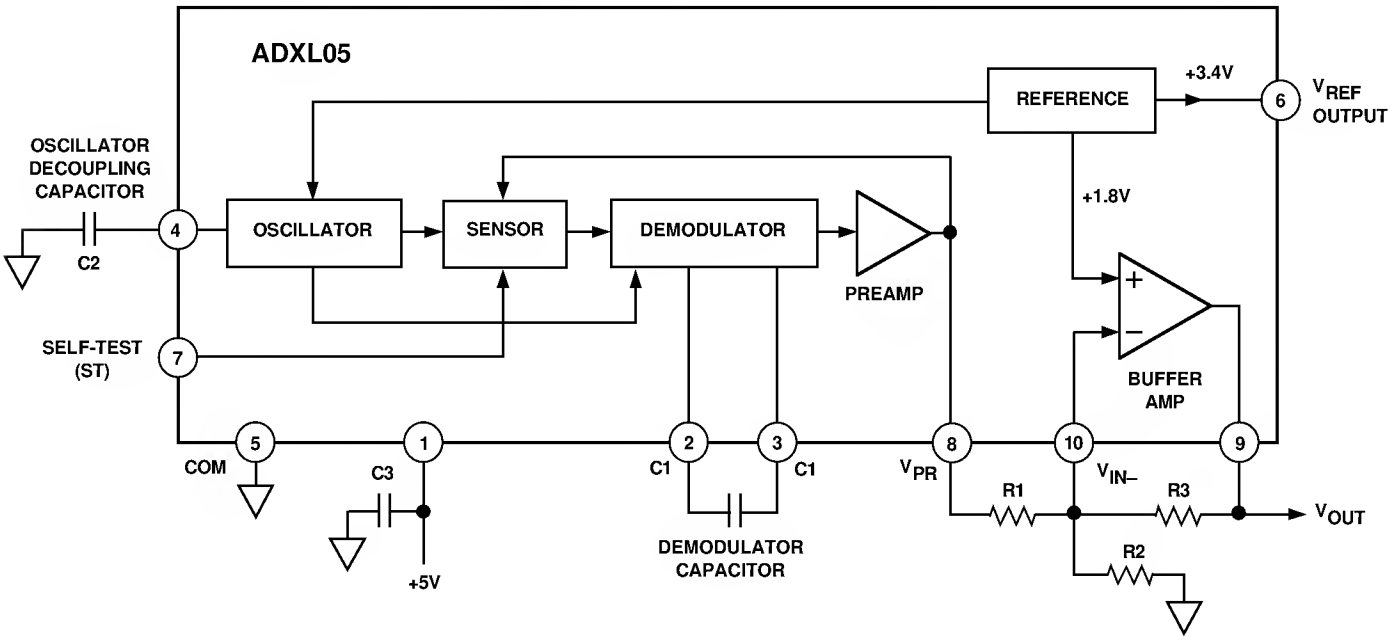

*Patents pending.

REV. B

Information furnished by Analog Devices is believed to be accurate and reliable. However, no responsibility is assumed by Analog Devices for its use, nor for any infringements of patents or other rights of third parties which may result from its use. No license is granted by implication or otherwise under any patent or patent rights of Analog Devices.

© Analog Devices, Inc., 1996

One Technology Way, P.O. Box 9106, Norwood. MA 02062-9106, U.S.A.
Tel: 617/329-4700 **Fax: 617/326-8703**

ADXL05– SPECIFICATIONS ($T_A = T_{MIN}$ to T_{MAX}, T_A = +25°C for J Grade Only, V_S = +5 V, @ Acceleration = 0 *g*, unless otherwise noted)

Parameter	Conditions	ADXL05J/A Min	Typ	Max	Units
SENSOR INPUT					
Measurement Range	Guaranteed Full Scale	–5		+5	g
Nonlinearity	Best Fit Straight Line, 5 g FS		0.2		% of FS
Alignment Error[1]			±1		Degrees
Transverse Sensitivity[2]			±2		%
SENSITIVITY					
Initial Sensitivity at V_{PR}	+25°C	175	200	225	mV/g
Initial Sensitivity at V_{OUT}	+25°C, R3/R1 = 5	0.875	1.000	1.125	V/g
Temperature Drift[3]			±0.5		% of Reading
ZERO g BIAS LEVEL	at V_{PR}				
Initial Offset		1.50	1.80	2.10	V
vs. Temperature[3]			±25/40		mV
vs. Supply	V_S = 4.75 V to 5.25 V		10	32	mV/V
NOISE PERFORMANCE	at V_{PR}				
Voltage Noise Density	BW = 4 Hz to 1 kHz		500	1000	$\mu g/\sqrt{Hz}$
Noise in 100 Hz Bandwidth			5		mg rms
Noise in 10 Hz Bandwidth			1.6		mg rms
FREQUENCY RESPONSE					
3 dB Bandwidth[4]	C1 = 0.022 µF (See Figure 9)	1000	1600		Hz
3 dB Bandwidth[4]	C1 = 0.010 µF		4		kHz
Sensor Resonant Frequency			12		kHz
SELF TEST INPUT					
Output Change at V_{PR}[5]	ST Pin from Logic "0" to "1"	–0.85	–1.00	–1.15	V
Logic "1" Voltage		2.0			V
Logic "0" Voltage				0.8	V
Input Resistance	To Common		50		kΩ
+3.4 V REFERENCE					
Output Voltage		3.350	3.400	3.450	V
Output Temperature Drift[3]			±5		mV
Power Supply Rejection	DC, V_S = +4.75 V to +5.25 V		1	10	mV/V
Output Current	Sourcing	500			µA
PREAMPLIFIER OUTPUT					
Voltage Swing		0.25		V_S – 1.4	V
Current Output	Source or Sink	30	80		µA
Capacitive Load Drive			100		pF
BUFFER AMPLIFIER					
Input Offset Voltage[6]	Delta from Nominal 1.800 V		±10	±25	mV
Input Bias Current			5	20	nA
Open-Loop Gain	DC		80		dB
Unity Gain Bandwidth			200		kHz
Output Voltage Swing	I_{OUT} = ±100 µA	0.25		V_S – 0.25	V
Capacitive Load Drive		1000			pF
Power Supply Rejection	DC, V_S = +4.75 V to +5.25 V		1	10	mV/V
POWER SUPPLY					
Operating Voltage Range		4.75		5.25	V
Quiescent Supply Current			8.0	10.0	mA
TEMPERATURE RANGE					
Operating Range J		0		+70	°C
Specified Performance A		–40		+85	°C
Automotive Grade*		–40		+125	°C

NOTES

[1]Alignment error is specified as the angle between the true and indicated axis of sensitivity, (see Figure 2).

[2]Transverse sensitivity is measured with an applied acceleration that is 90° from the indicated axis of sensitivity. Transverse sensitivity is specified as the percent of transverse acceleration that appears at the V_{PR} output. This is the algebraic sum of the alignment and the inherent sensor sensitivity errors, (see Figure 2).

[3]Specification refers to the maximum change in parameter from its initial at +25°C to its worst case value at T_{MIN} to T_{MAX}.

[4]Frequency at which response is 3 dB down from dc response assuming an exact C1 value is used. Maximum recommended BW is 6 kHz using a 0.010 µF capacitor, refer to Figure 9.

[5]Applying logic high to the self-test input has the effect of applying an acceleration of –5 g to the ADXL05.

[6]Input offset voltage is defined as the output voltage differential from 1.800 V when the amplifier is connected as a follower. The voltage at this pin has a temperature drift proportional to that of the 3.4 V reference.

*Contact factory for availability of automotive grade devices.

All min and max specifications are guaranteed. Typical specifications are not tested or guaranteed.
Specifications subject to change without notice.

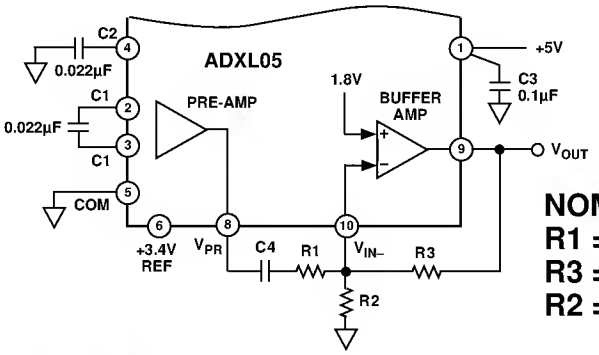

NOMINAL VALUES:
R1 = 49.9kΩ
R3 = 249kΩ
R2 = 640kΩ

AC COUPLED CONNECTION (±1.5 *g* Full Scale)

(@ V_{OUT} Terminal (Pin 9), unless otherwise noted. 0 *g* Bias Level = +2.5 V, C1 = 0.022 µF, R2 = 2.57 R3

Parameter	Conditions	ADXL05J/A Min	Typ	Max	Units
Buffer Gain	G = R3/R1*		5		
FULL-SCALE RANGE		–1.5		+1.5	g
SENSITIVITY	@ +25°C	875	1000	1,125	mV/g
Temperature Drift	T_{MIN} to T_{MAX}		±0.5		% of Reading
ZERO g BIAS LEVEL	@ +25°C		2.5		V
Temperature Drift	+25°C to T_{MIN} or T_{MAX}		2/5		mV
FREQUENCY RESPONSE	C4 = 3.3 µF, R1 = 49.9 kΩ	1		1000	Hz

*Note: Resistor tolerance will affect system accuracy. Use of ±1% (or better) metal film resistors is recommended.

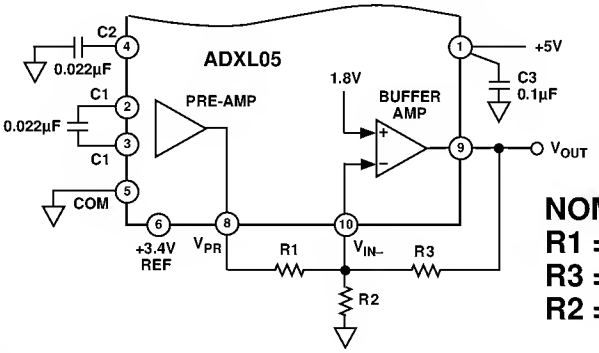

NOMINAL VALUES:
R1 = 49.9kΩ
R3 = 100kΩ (G=2)
R2 = 255kΩ (G=2)

DC COUPLED CONNECTION (±2 *g* Full Scale)

(@ V_{OUT} Terminal (Pin 9), unless otherwise noted. 0 *g* Bias Level = +2.5 V, C1 = 0.022 µF, R2 = 2.57 R3)

Parameter	Conditions	ADXL05J/A Min	Typ	Max	Units
Buffer Gain	G = R3/R1*		2		
FULL-SCALE RANGE		–2		+2	g
SENSITIVITY	@ +25°C	350	400	450	mV/g
Temperature Drift	T_{MIN} to T_{MAX}		±0.5		% of Reading
ZERO g BIAS LEVEL	@ +25°C	1.75	2.5	3.2	V
Temperature Drift	+25°C to T_{MIN} or T_{MAX}		±50/80		mV
FREQUENCY RESPONSE		dc		1000	Hz

*Note: Resistor tolerance will affect system accuracy. Use of ±1% (or better) metal film resistors is recommended.

ABSOLUTE MAXIMUM RATINGS*

Acceleration (Any Axis, Unpowered for 0.5 ms) ..... 1000 g
Acceleration (Any Axis, Powered for 0.5 ms) ..... 500 g
$+V_S$ ..... –0.3 V to +7.0 V
Output Short Circuit Duration
(V_{PR}, V_{OUT}, V_{REF} Terminals to Common) ..... Indefinite
Operating Temperature .....–55°C to +125°C
Storage Temperature .....–65°C to +150°C

*Stresses above those listed under "Absolute Maximum Ratings" may cause permanent damage to the device. This is a stress rating only; the functional operation of the device at these or any other conditions above those indicated in the operational sections of this specification is not implied. Exposure to absolute maximum rating conditions for extended periods may affect device reliability.

Package Characteristics

Package	θ_{JA}	θ_{JC}	Device Weight
10-Pin TO-100	130°C/W	30°C/W	5 Grams

ORDERING GUIDE

Model	Temperature Range
ADXL05JH	0°C to +70°C
ADXL05AH	–40°C to +85°C

CAUTION

ESD (electrostatic discharge) sensitive device. Electrostatic charges as high as 4000 V readily accumulate on the human body and test equipment and can discharge without detection. Although the ADXL05 features proprietary ESD protection circuitry, permanent damage may occur on devices subjected to high energy electrostatic discharges. Therefore, proper ESD precautions are recommended to avoid performance degradation or loss of functionality.

Drops onto hard surfaces can cause shocks of greater than 1000 g and exceed the absolute maximum rating of the device. Care should be exercised in handling to avoid damage.

PIN DESCRIPTION

+5 V	The power supply input pin.
C2	Connection for an external bypass capacitor (nominally 0.022 µF) used to prevent oscillator switching noise from interfering with other ADXL05 circuitry. Please see the section on component selection.
C1	Connections for the demodulator capacitor, nominally 0.022 µF. See the section on component selection for application information.
COM	The power supply common (or "ground") connection.
V_{REF}	Output of the internal 3.4 V voltage reference.
ST	The digital self-test input. It is both CMOS and TTL compatible.
V_{PR}	The ADXL05 preamplifier output providing an output voltage of 200 mV per g of acceleration.
V_{OUT}	Output of the buffer amplifier.
V_{IN-}	The inverting input of the uncommitted buffer amplifier.

CONNECTION DIAGRAM
10-Header (TO-100)

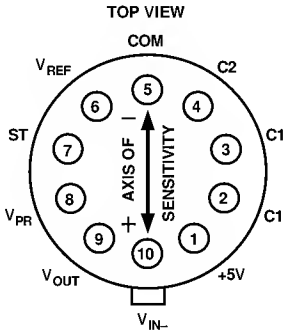

NOTES:
AXIS OF SENSITIVITY IS ALONG A LINE BETWEEN PIN 5 AND THE TAB.
THE CASE OF THE METAL CAN PACKAGE IS CONNECTED TO PIN 5 (COMMON).
ARROW INDICATES DIRECTION OF POSITIVE ACCELERATION ALONG AXIS OF SENSITIVITY.

GLOSSARY OF TERMS

Acceleration: Change in velocity per unit time.

Acceleration Vector: Vector describing the net acceleration acting upon the ADXL05 (A_{XYZ}).

g: A unit of acceleration equal to the average force of gravity occurring at the earth's surface. A g is approximately equal to 32.17 feet/s^2, or 9.807 meters/s^2.

Nonlinearity: The maximum deviation of the ADXL05 output voltage from a best fit straight line fitted to a plot of acceleration vs. output voltage, calculated as a % of the full-scale output voltage (@ 5 g).

Resonant Frequency: The natural frequency of vibration of the ADXL05 sensor's central plate (or "beam"). At its resonant frequency of 12 kHz, the ADXL05's moving center plate has a peak in its frequency response with a Q of 3 or 4.

Sensitivity: The output voltage change per g unit of acceleration applied, specified at the V_{PR} pin in mV/g.

Sensitive Axis (X): The most sensitive axis of the accelerometer sensor. Defined by a line drawn between the package tab and Pin 5 in the plane of the pin circle. See Figures 2a and 2b.

Sensor Alignment Error: Misalignment between the ADXL05's on-chip sensor and the package axis, defined by Pin 5 and the package tab.

Total Alignment Error: Net misalignment of the ADXL05's on-chip sensor and the measurement axis of the application. This error includes errors due to sensor die alignment to the package, and any misalignment due to installation of the sensor package in a circuit board or module.

Transverse Acceleration: Any acceleration applied 90° to the axis of sensitivity.

Transverse Sensitivity Error: The percent of a transverse acceleration that appears at the V_{PR} output. For example, if the transverse sensitivity is 1%, then a +10 g transverse acceleration will cause a 0.1 g signal to appear at V_{PR} (1% of 10 g). Transverse sensitivity can result from a sensitivity of the sensor to transverse forces or from misalignment of the internal sensor to its package.

Transverse Y Axis: The axis perpendicular (90°) to the package axis of sensitivity in the plane of the package pin circle. See Figure 2.

Transverse Z Axis: The axis perpendicular (90°) to both the package axis of sensitivity and the plane of the package pin circle. See Figure 2.

Polarity of the Acceleration Output

The polarity of the ADXL05 output is shown in the Figure 1. When oriented to the earth's gravity (and held in place), the ADXL05 will experience an acceleration of +1 g. This corresponds to a change of approximately +200 mV at the V_{PR} output pin. Note that the polarity will be reversed to a negative going signal at the buffer amplifier output V_{OUT}, due to its inverting configuration.

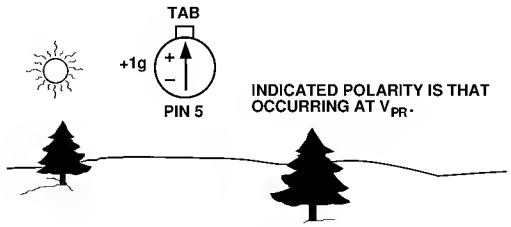

Figure 1. Output Polarity at V_{PR}

Acceleration Vectors in Three Dimensions

The ADXL05 is a sensor designed to measure accelerations that result from an applied force. The ADXL05 responds to the component of acceleration on its sensitive X axis. Figures 2a and 2b show the relationship between the sensitive "X" axis and the transverse "Z" and "Y" axes as they relate to the TO-100

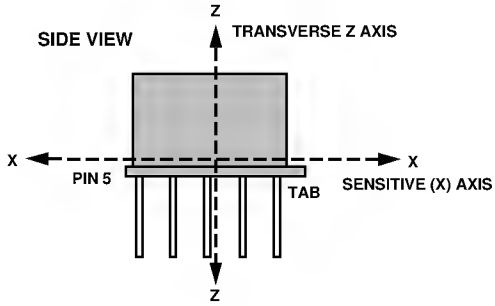

Figure 2a. Sensitive X and Transverse Z Axis

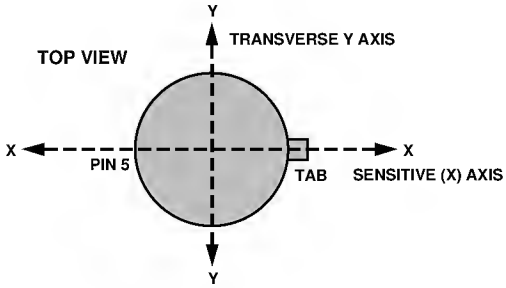

Figure 2b. Sensitive X and Transverse Y Axis

package. Figure 2c describes a three dimensional acceleration vector (A_{XYZ}) which might act on the sensor, where A_X is the component of interest. To determine A_X, first, the component of acceleration in the XY plane (A_{XY}) is found using the cosine law:

$$A_{XY} = A_{XYZ}\,(\cos\theta_{XY}) \text{ then}$$

$$A_X = A_{XY}\,(\cos\theta_X)$$

$$\text{Therefore: Nominal } V_{PR} = 200\text{ mV/g}\,(A_{XYZ})\,(\cos\theta_{XY})\,\cos\theta_X$$

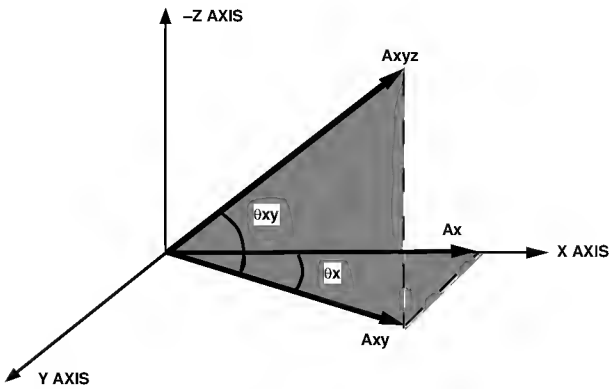

Figure 2c. A Vector Analysis of an Acceleration Acting Upon the ADXL05 in Three Dimensions

Note that an ideal sensor will react to forces along or at angles to its sensitive axis but will reject signals from its various transverse axes, i.e., those exactly 90° from the sensitive "X" axis. But even an ideal sensor will produce output signals if the transverse signals are not exactly 90° to the sensitive axis. An acceleration that is acting on the sensor from a direction different from the sensitive axis will show up at the ADXL05 output at a reduced amplitude.

Table I shows the percentage signals resulting from various θ_X angles. Note that small errors in alignment have a negligible effect on the output signal. A 1° error will only cause a 0.02% error in the signal. Note, however, that a signal coming 1° off of the transverse axis (i.e., 89° off the sensitive axis) will still contribute 1.7% of its signal to the output. Thus large transverse signals could cause output signals as large as the signals of interest. Table I may also be used to approximate the effect of the ADXL05's internal errors due to misalignment of the die to the package. For example: a 1 degree sensor alignment error will allow 1.7% of a transverse signal to appear at the output.

Table I. Ideal Output Signals for Off Axis Applied Accelerations Disregarding Device Alignment and Transverse Sensitivity Errors

θ_X	% of Signal Appearing at Output	Output in gs for a 5 g Applied Acceleration
0	100%	5.000 (On Axis)
1°	99.98%	4.999
2°	99.94%	4.997
3°	99.86%	4.993
5°	99.62%	4.981
10°	98.48%	4.924
30°	86.60%	4.330
45°	70.71%	3.536
60°	50.00%	2.500
80°	17.36%	0.868
85°	8.72%	0.436
87°	5.25%	0.263
88°	3.49%	0.175
89°	1.7%	0.085
90°	0%	0.000 (Transverse Axis)

Mounting Fixture Resonances

A common source of error in acceleration sensing is resonance of the mounting fixture. For example, the circuit board that the ADXL05 mounts to may have resonant frequencies in the same range as the signals of interest. This could cause the signals measured to be larger than they really are. A common solution to this problem is to dampen these resonances by mounting the ADXL05 near a mounting post or by adding extra screws to hold the board more securely in place.

When testing the accelerometer in your end application, it is recommended that you test the application at a variety of frequencies in order to ensure that no major resonance problems exist (refer to Analog Devices Application Note AN-379).

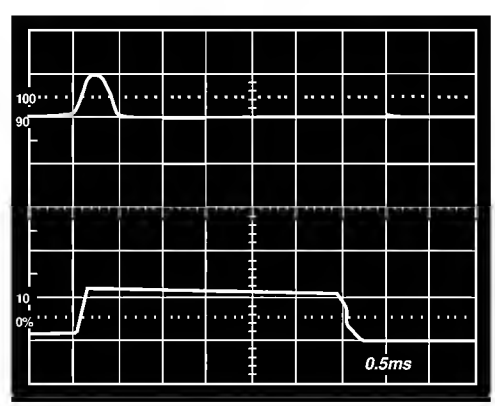

Figure 3. 500 g Shock Overload Recovery. Top Trace, PCB Reference Accelerometer Output: 500 g/Vertical Division. Bottom Trace, ADXL05 Output at V_{PR}

Typical Characteristics (@ +25°C, C1 = C2 = 0.022 μF, V_S = +5 V unless otherwise noted)

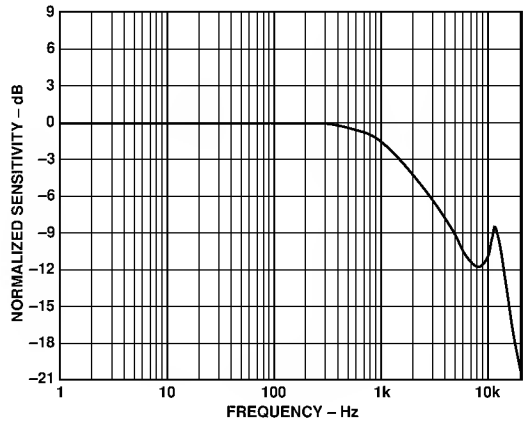

Figure 4. Normalized Sensitivity vs. Frequency

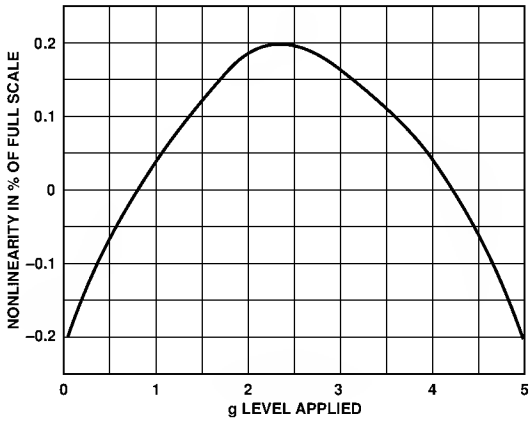

Figure 7. % Nonlinearity vs. g Level Applied

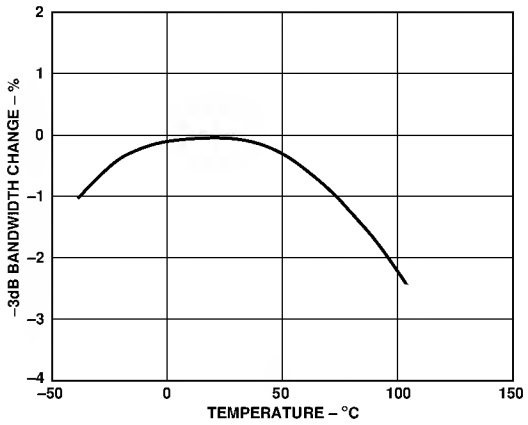

Figure 5. –3 dB Bandwidth vs. Temperature

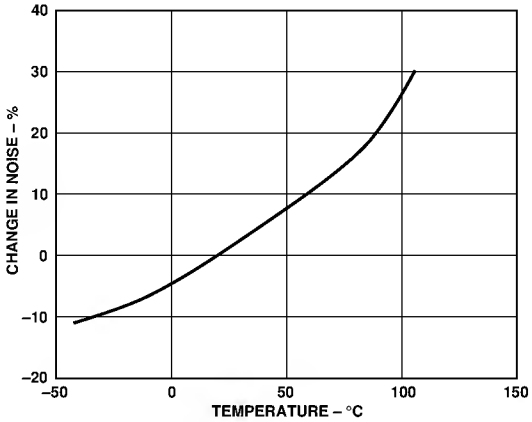

Figure 8. % Change in Noise from +25°C vs. Temperature

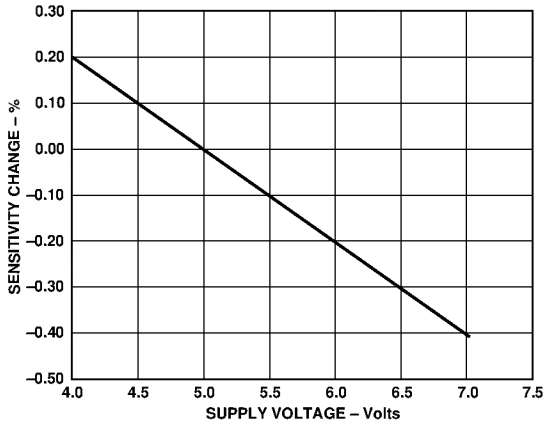

Figure 6. Sensitivity Change at V_{PR} vs. Supply Voltage

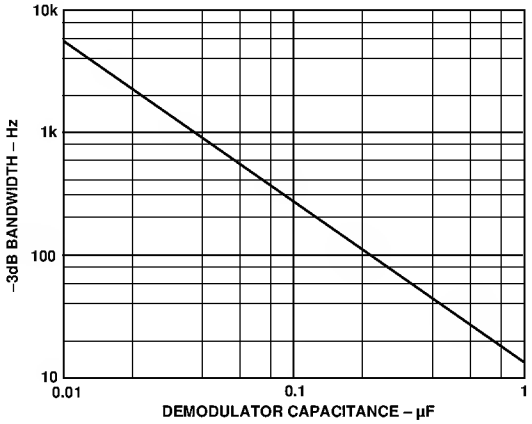

Figure 9. –3 dB Bandwidth vs. Demodulator Capacitance

Typical Characteristics (@ +25°C, C1 = C2 = 0.022 μF, V_S = +5 V unless otherwise noted)

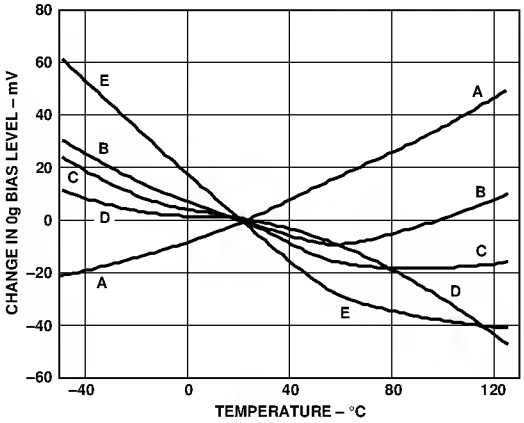

Figure 10. Change in 0 g Bias Level vs. Temperature (Characteristic Curves from Five Typical Units)

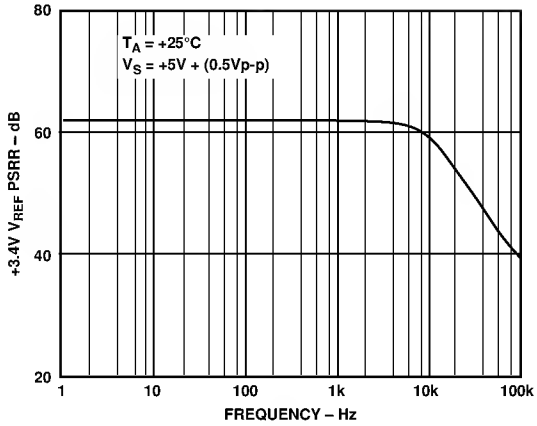

Figure 13. +3.4 V V_{REF} PSRR vs. Frequency

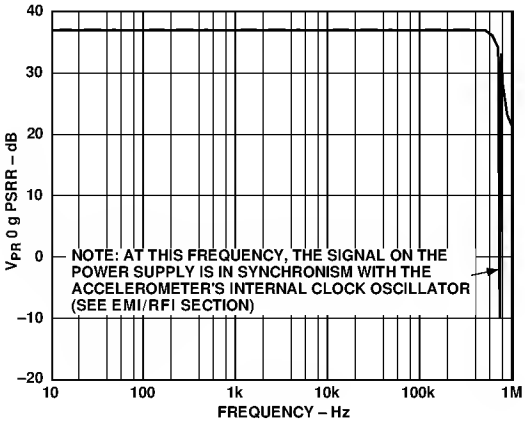

Figure 11. 0 g PSRR vs. Frequency

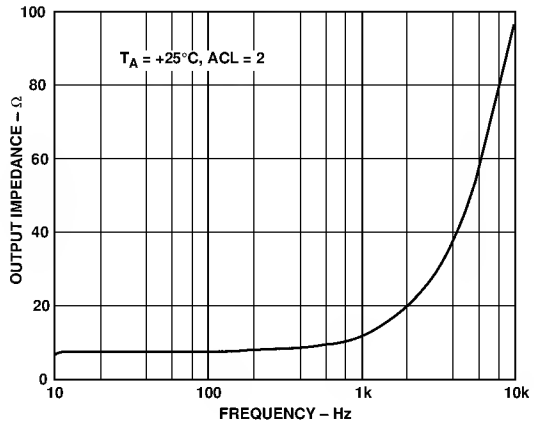

Figure 14. Buffer Amplifier Output Impedance vs. Frequency

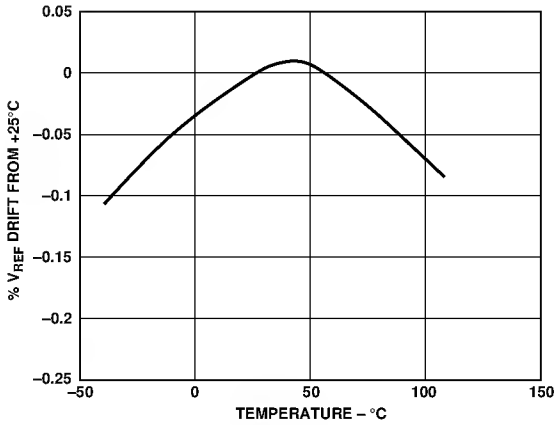

Figure 12. % V_{REF} Drift vs. Temperature

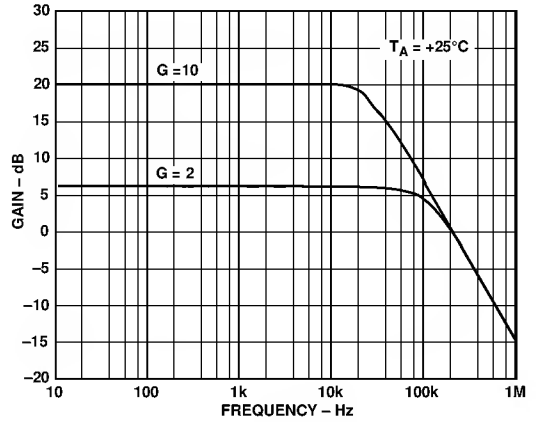

Figure 15. Buffer Amplifier Closed-Loop Gain vs. Frequency

THEORY OF OPERATION

The ADXL05 is a complete acceleration measurement system on a single monolithic IC. It contains a polysilicon surface-micro machined sensor and signal conditioning circuitry which implements a force-balance control loop. The ADXL05 is capable of measuring both positive and negative acceleration to a maximum level of ±5 g.

Figure 16 is a simplified view of the ADXL05's acceleration sensor at rest. The actual structure of the sensor consists of 46 unit cells and a common beam. The differential capacitor sensor consists of independent fixed plates and central plates attached to the main beam that moves in response to an applied acceleration. The two capacitors are series connected, forming a capacitive divider with a common movable central plate. The sensor's fixed capacitor plates are driven differentially by a 1 MHz square wave: the two square wave amplitudes are equal but are 180° out of phase from one another. When at rest, the values of the two capacitors are the same, and therefore, the voltage output at their electrical center (i.e., at the center plate) is zero.

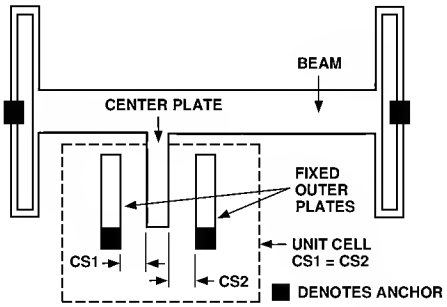

Figure 16. A Simplified Diagram of the ADXL05 Sensor at Rest

Figure 17 shows the sensor responding to an applied acceleration. When this occurs, the common central plate or "beam" moves closer to one of the fixed plates while moving further from the other. This creates a mismatch in the two capacitances, resulting in an output signal at the central plate. The output amplitude of the signal varies directly with the amount of acceleration experienced by the sensor.

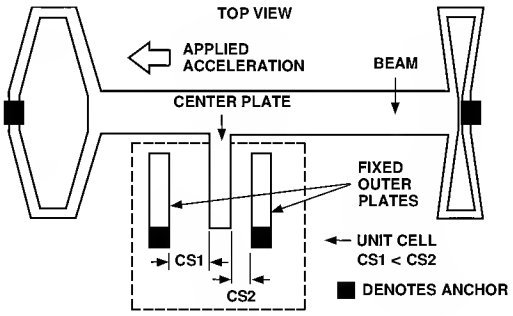

Figure 17. The ADXL05 Sensor Momentarily Responding to an Externally Applied Acceleration

Figure 18 shows a block diagram of the ADXL05. The voltage output from the central plate of the sensor is buffered and then applied to a synchronous demodulator which is clocked, in phase, with the same oscillator that drives the fixed plates of the sensor. If the applied voltage is in sync and in phase with the clock, a positive output will result. If the applied voltage is in sync but 180° out of phase with the clock, then the demodulator's output will be negative. All other signals will be rejected. An external capacitor, C1, sets the bandwidth of the demodulator.

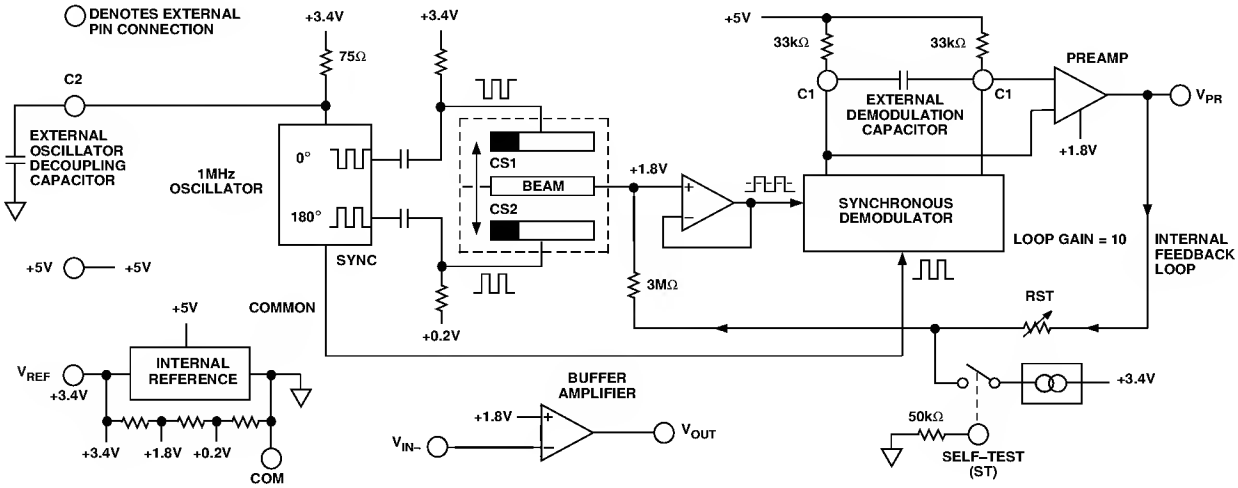

Figure 18. Functional Block Diagram

The output of the synchronous demodulator drives the preamp—an instrumentation amplifier buffer which is referenced to +1.8 volts. The output of the preamp, V_{PR}, is fed back to the outer plate of the sensor through a 3 MΩ isolation resistor. The V_{PR} voltage electrostatically resets the sensor back to its 0 g position and is a direct measure of the applied acceleration.

The output of the ADXL05's preamplifier is 1.8 V ± 200 mV/g, with an output range of ±1 V for a ±5 g input. An uncommitted buffer amplifier provides the capability to adjust the scale factor and 0 g offset level over a wide range. An internal reference supplies the necessary regulated voltages for powering the chip and +3.4 volts for external use.

A self-test is initiated by applying a TTL "high" level voltage (> +2.0 V dc) to the ADXL05's self-test pin, which causes the chip to apply a deflection voltage to the beam which moves it an amount equal to –5 g (the negative full-scale output of the device). Note that the ±15% tolerance of the self-test circuit is not proportional to the sensitivity error, see Self-Test section.

BASIC CONNECTIONS FOR THE ADXL05

Figure 19 shows the basic connections needed for the ADXL05 to measure accelerations in the ±5 g range with an output scale factor 400 mV/g, a 2.5 V 0 g level, a ±2.0 V full-scale swing around 0 g, and a 3 dB bandwidth of approximately 1.6 kHz.

Using the circuit of Figure 19, the overall transfer function is:

$$V_{OUT} = \left(\frac{R3}{R1}(1.8V - V_{PR})\right) + \left(\frac{R3}{R2}(1.8)\right) + 1.8V$$

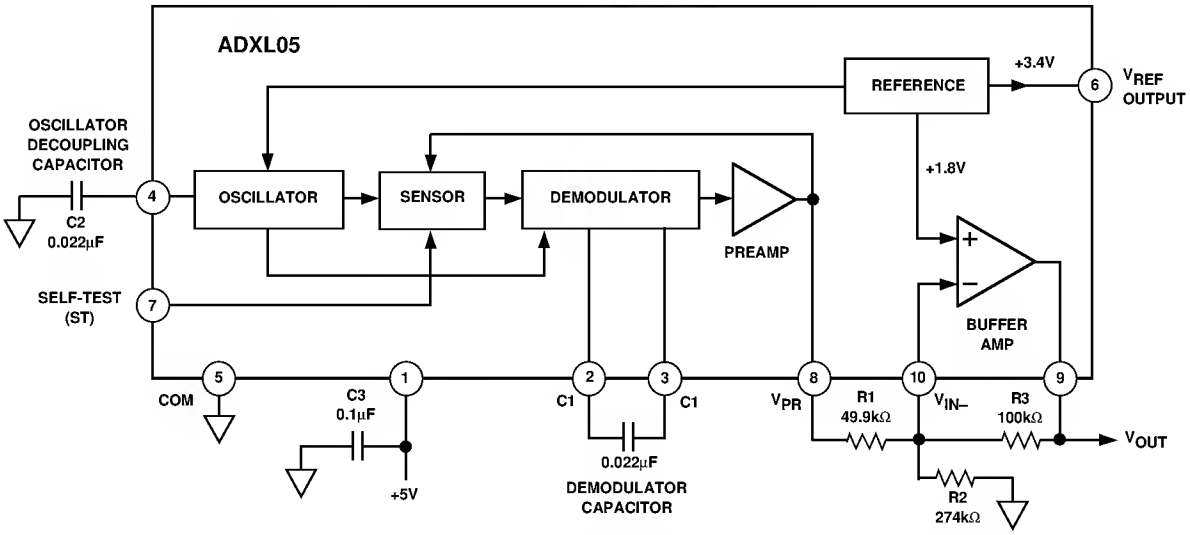

Figure 19. ADXL05 Application Providing an Output Sensitivity of 400 mV/g, a +2.5 V 0 g Level and a Bandwidth of 1 kHz

USING THE INTERNAL BUFFER AMPLIFIER TO VARY THE ACCELEROMETER'S OUTPUT SCALE FACTOR AND 0 g BIAS LEVEL

The ADXL05 accelerometer has an onboard buffer amplifier that allows the user to change the output scale factor and 0 g bias level.

The output scale factor of an accelerometer is simply how many volts output are provided per g of applied acceleration. This should not be confused with its resolution. The resolution of the device is the lowest g level the accelerometer is capable of measuring. Resolution is principally determined by the device noise and the measurement bandwidth.

The 0 g bias level is simply the dc output level of the accelerometer when it is not in motion or being acted upon by the Earth's gravity.

Setting the Accelerometer's Scale Factor

Figure 20 shows the basic connections for using the onboard buffer amplifier to increase the output scale factor. The nominal output level in volts from V_{PR} (the preamplifier output) is equal to the g forces applied to the sensor (along its sensitive axis) times 200 mV/g. The use of the buffer is always recommended, even if the preset scale factor is adequate, as the buffer helps prevent any following circuitry from loading down the V_{PR} output.

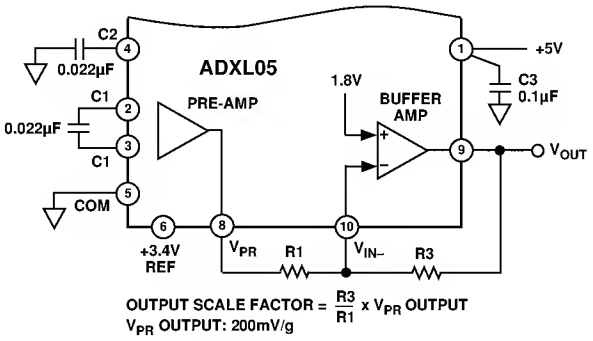

Figure 20. Basic Buffer Connections

In Figure 20, the output scale factor at Pin 9 (V_{OUT}) is the output at V_{PR} times the gain of the buffer, which is simply the value of resistor R3 divided by R1. Choose a convenient scale factor, keeping in mind that the buffer gain not only amplifies the signal but any noise or drift as well. Too much gain can also cause the buffer to saturate and clip the output wave form.

The circuit of Figure 20 is entirely adequate for many applications, but its accuracy is dependent on the pretrimmed accuracy of the accelerometer and this will vary by product type and grade. For the highest possible accuracy, an external trim is recommended. As shown by Figure 21, this consists of a potentiometer, R1a, in series with a fixed resistor, R1b.

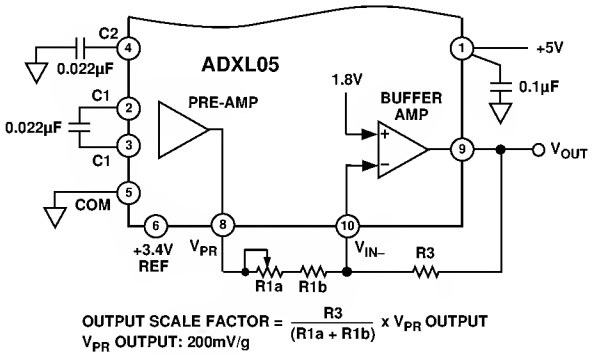

Figure 21. External Scale Factor Trimming

Setting the Accelerometer's 0 g Bias Level, AC Coupled Response

If a dc (gravity) response is not required—for example in motion sensing or vibration measurement applications—ac coupling can be used between the preamplifier output and the buffer input as shown in Figure 22. The use of ac coupling between V_{PR} and the buffer input virtually eliminates any 0 g drift and allows the maximum buffer gain without clipping.

Resistor R1 and capacitor C4 together form a high pass filter whose corner frequency is $1/(2\pi R1\,C4)$. This means that this simple filter will reduce the signal from V_{PR} by 3 dB at the corner frequency, and it will continue to reduce it at a rate of 6 dB/octave (20 dB per decade) for signals below the corner frequency.

Note that capacitor C4 should be a nonpolarized, low leakage type. If a polarized capacitor is used, tantalum types are preferred, rather than electrolytic. With polarized capacitors, V_{PR} should be measured on each device and the positive terminal of the capacitor connected toward either V_{PR} or V_{IN}—whichever is more positive

The 0 g offset level of the ADXL05 accelerometer is preset at +1.8 V. This can easily be changed to a more convenient level, such as +2.5 V which, being at the middle of the supply voltage, provides the greatest output voltage swing.

When using the ac coupled circuit of Figure 22, only a single resistor, R2, is required to swing the buffer output to +2.5 V. Since the "+" input of the buffer is referenced at +1.8 V, its summing junction, Pin 10, is also held constant at +1.8 V. Therefore, to swing the buffer's output to the desired +2.5 V 0 g bias level, its output must move up +0.7 V (2.5 V – 1.8 V = 0.7 V). Therefore, the current needed to flow through R3 to cause this change, IR3, is equal to:

$$IR3 = \frac{0.7\ \text{Volts}}{R3\ \text{in Ohms}}$$

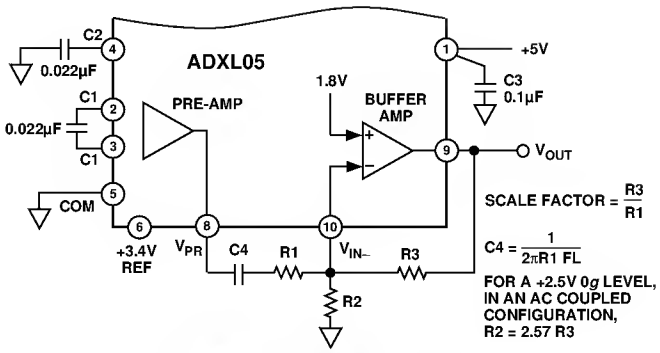

RECOMMENDED COMPONENT VALUES

FULL SCALE RANGE	SCALE FACTOR IN mV/*g*	DESIRED LOW FREQUENCY LIMIT, F_L	R1 IN kΩ	CLOSEST C4 VALUE	R3 IN kΩ	R2 VALUE IN kΩ FOR +2.5V 0*g* LEVEL
±2*g*	1000	30Hz	49.9	0.10µF	249	640
±5*g*	400	30Hz	127	0.039µF	249	640
±2*g*	1000	3Hz	49.9	1.0µF	249	640
±5*g*	400	1Hz	127	1.5µF	249	640
±5*g*	400	0.1Hz	127	15µF	249	640

Figure 22. Typical Component Values for AC Coupled Circuit

In order to force this current through R3, the same current needs to flow from Pin 10 to ground through resistor R2. Since Pin 10 is always held at +1.8 V, R2 is equal to:

$$R2 = \frac{1.8\ \text{Volts}}{IR3}$$

Therefore, for an ac coupled connection and a +2.5 V 0 g output:

$$R2 = \frac{1.8\text{Volts} \times R3}{0.7\text{Volts}} = 2.57 \times R3$$

If ac coupling is used, the self-test feature must be monitored at V_{PR}, rather than at the buffer output (since the self test output is a dc voltage).

Setting the Accelerometer's 0 g Bias Level, DC Coupled Response

When a true dc (gravity) response is needed, the output from the preamplifier, V_{PR}, must be dc coupled to the buffer input. For high gain applications, a 0 g offset trim will also be needed. The external offset trim permits the user to set the 0 g offset voltage to exactly +2.5 volts, since this is at the center of the +5 volt power supply it will allow the maximum output swing from the buffer without clipping.

With a dc coupled connection, any difference between a non-ideal +1.8 V 0 g level at V_{PR} and the fixed +1.8 V level at the buffer's summing junction will be amplified by the gain of the buffer. If the 0 g level only needs to be approximate and the buffer is operated a low gain, a single fixed resistor, R2, can still be used. But to obtain the exact 0 g output desired or to allow the maximum output voltage swing from the buffer, the 0 g offset will need to be externally trimmed using the circuit of Figure 23. Normally, a value of 100 kΩ is typical for R2.

The buffer's maximum output swing should be limited to ±2 volts, which provides a safety margin of ±0.25 volts before clipping. With a +2.5 volt 0 g level, the maximum gain the buffer should be set to (R3/R1) equals:

$$\frac{2\text{Volts}}{200\ \text{mV/g Times the Max Applied Acceleration in gs}}$$

Note that the value of R1 should be kept as large as possible, 20 kΩ or greater, to avoid loading down the V_{PR} output.

The device scale factor and 0 g offset levels can be calibrated using the Earth's gravity as explained in the section "calibrating the ADXL05."

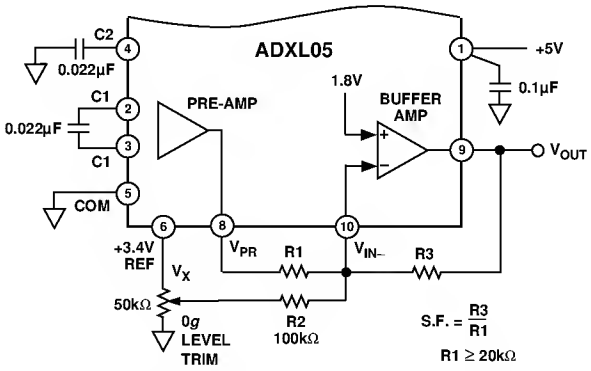

RECOMMENDED COMPONENT VALUES FOR VARIOUS OUTPUT SCALE FACTORS

FULL SCALE	mV per *g*	R1 kΩ	R3 kΩ
±1*g*	2000	30.1	301
±2*g*	1000	40.2	200
±4*g*	500	40.2	100
±5*g*	400	49.2	100

Figure 23. Typical Component Values for Circuit with External 0 g Trimming

DEVICE BANDWIDTH VS. MEASUREMENT RESOLUTION

Although an accelerometer is usually specified according to its full scale (clipping) g level, the limiting resolution of the device, i.e., its minimum discernible input level, is extremely important when measuring low g accelerations.

The limiting resolution is predominantly set by the measurement noise "floor" which includes the ambient background noise and the noise of the ADXL05 itself. The level of the noise floor varies directly with the bandwidth of the measurement. As the measurement bandwidth is reduced, the noise floor drops, improving the signal-to-noise ratio of the measurement and increasing its resolution.

The bandwidth of the accelerometer can be easily reduced by adding low-pass or bandpass filtering. Figure 24 shows the typical noise vs. bandwidth characteristic of the ADXL05.

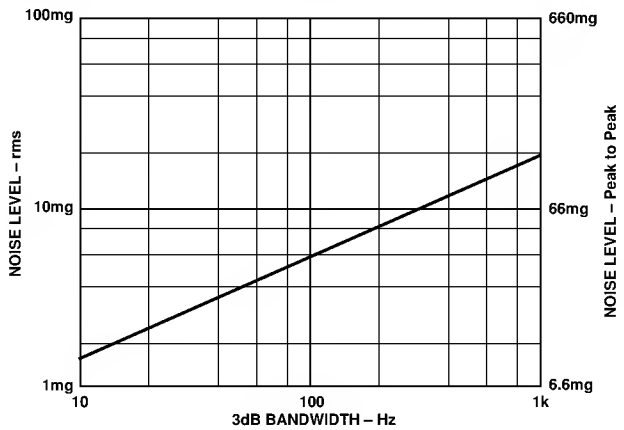

Figure 24. Noise Level vs. 3 dB Bandwidth

The output noise of the ADXL05 scales with the square root of the measurement bandwidth. With a single pole roll-off, the equivalent rms noise bandwidth is π divided by 2 or approximately 1.5 times the 3 dB bandwidth. For example, the typical rms noise of the ADXL05J using a 100 Hz one pole post filter is:

$$\text{Noise(rms)} = 500\ \mu g/\sqrt{Hz} \times \sqrt{100(1.5)} = 6{,}124\ \mu g \text{ or } 6.1\text{ mg rms}$$

For the bandpass filter of Figure 27 where both ac coupling and low pass filtering are used, the low frequency roll-off, F_L, is determined by C4 and R1 and the high frequency roll-off, F_H, is determined by the 1-pole post filter R3, C5.

The equivalent rms noise of the bandpass filter is equal to

$$500\ \mu g/\sqrt{Hz} \times \sqrt{(1.5\,F_H) - (F_L/1.5)}.$$

For example, the typical rms noise of the ADXL05 using 1 pole ac coupling with a bandwidth of 10 Hz and 1 pole low-pass filter of 100 Hz is:

$$\text{Noise (rms)} = 500\ \mu g/\sqrt{Hz} \times \sqrt{1.5(100) - (10/1.5)}$$

$$= 5{,}987\ \mu g \text{ rms or} \approx 5.9\text{ mg rms}$$

Because the ADXL05's noise is for all practical purposes Gaussian in amplitude distribution, the highest noise amplitudes have the smallest (yet nonzero) probability. Peak-to-peak noise is therefore difficult to measure and can only be estimated due to its statistical nature. Table II is useful for estimating the probabilities of exceeding various peak values, given the rms value.

Table II.

Nominal Peak-to-Peak Value	% of Time that Noise Will Exceed Nominal Peak-to-Peak Value
2.0 × rms	32%
4.0 × rms	4.6%
6.0 × rms	0.27%
6.6 × rms	0.1%
8.0 × rms	0.006%

RMS and peak-to-peak noise (for 0.1% uncertainty) for various bandwidths is estimated in Figure 24. As shown by the figure, device noise drops dramatically as the operating bandwidth is reduced. For example, when operated in a 1 kHz bandwidth, the ADXL05 typically has an rms noise level of 19 mg. With ±5 g applied accelerations, this 19 mg resolution limit is normally quite satisfactory; but for smaller acceleration levels the noise is now a much greater percentage of the signal. As shown by the figure, when the device bandwidth is rolled off to 100 Hz, the noise level is reduced to approximately 6 mg, and at 10 Hz it is down to less than 2 mg.

Alternatively, the signal-to-noise ratio may be improved considerably by using a microprocessor to perform multiple measurements and then compute the average signal level. When using this technique, with 100 measurements, the signal-to-noise ratio will be increased by a factor of 10 (20 dB).

Low-Pass Filtering

The bandwidth of the accelerometer can easily be reduced by using post filtering. Figure 25 shows how the buffer amplifier can be connected to provide 1-pole post filtering, 0 g offset trimming, and output scaling. The table provides practical component values for various full-scale g levels and approximate circuit bandwidths. For bandwidths other than those listed, use the formula:

$$C4 = \frac{1}{(2\pi R3)\,\text{Desired 3dB Bandwidth in Hz}}$$

or simply scale the value of capacitor C4 accordingly, i.e., for an application with a 50 Hz bandwidth, the value of C4 will need to be twice as large as its 100 Hz value. If further noise reduction is needed while maintaining the maximum possible bandwidth, then a 2- or 3-pole post filter is recommended. These provide a much steeper roll-off of noise above the pole frequency. Figure 26 shows a circuit that uses the buffer amplifier to provide 2-pole post filtering. Component values for the 2-pole filter were selected to operate the buffer at unity gain. Capacitors C3 and C4 were chosen to provide 3 dB bandwidths of 10 Hz, 30 Hz, 100 Hz, and 300 Hz.

In this configuration, the nominal buffer amplifier output will be +1.8 V ± the 200 mV/g scale factor of the accelerometer. An AD820 external op amp allows noninteractive adjustment of 0 g offset and scale factor. The external op amp offsets and scales the output to provide a +2.5 V ± 2 V output over a wide range of full-scale g levels.

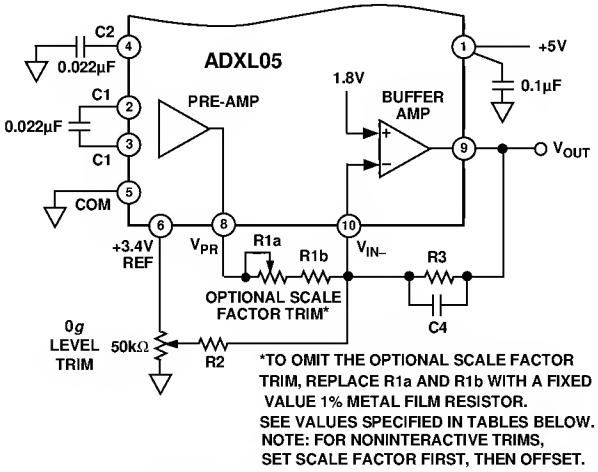

COMPONENT VALUES FOR VARIOUS FULL-SCALE RANGES AND BANDWIDTHS

FULL SCALE	mV per *g*	3dB BW (Hz)	R1a kΩ	R1b kΩ	R3 kΩ	R2 kΩ	C4 µF
±1*g*	2000	10	10	24.9	301	100	0.056
±2*g*	1000	100	10	35.7	200	100	0.0082
±4*g*	500	200	10	35.7	100	100	0.0082
±5*g*	400	300	10	45.3	100	100	0.0056

$$3\text{dB BW} = \frac{1}{2\pi R3\,C4}$$

Figure 25. Using the Buffer Amplifier to Provide 1-Pole Post Filtering Plus Scale Factor and 0 g Level Trimming

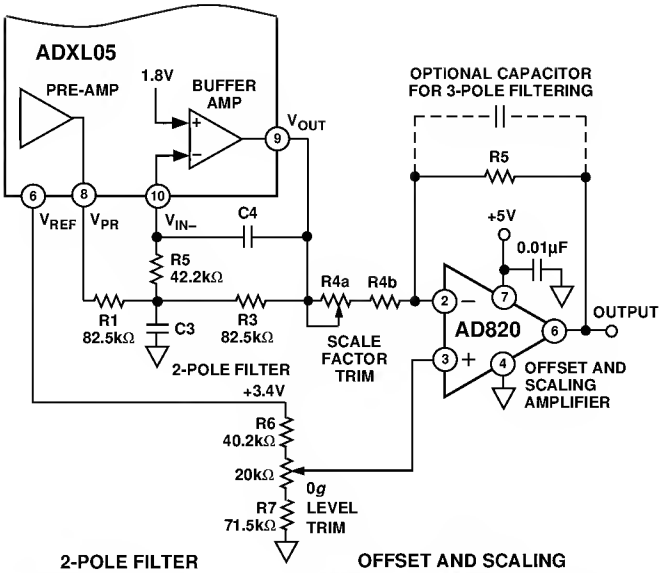

2-POLE FILTER COMPONENT VALUES

3dB BW (Hz)	C3µF	C4µF
300	0.027	0.0033
100	0.082	0.01
30	0.27	0.033
10	0.82	0.1

OFFSET AND SCALING AMPLIFIER COMPONENT VALUES

FULL SCALE	mV per *g*	GAIN	R4a kΩ	R4b kΩ	R5 kΩ
±1*g*	2000	10.00	10	24.9	301
±2*g*	1000	4.98	10	35.7	200
±4*g*	500	2.50	10	35.7	100
±5*g*	400	2.00	10	45.3	100

Figure 26. Two-Pole Filtering Circuit with Gain and 0 g Offset Adjustment

Bandpass Filtering

Figure 27 shows how the combination of ac coupling and low-pass filtering together form a bandpass filter that provides an even greater improvement in noise reduction.

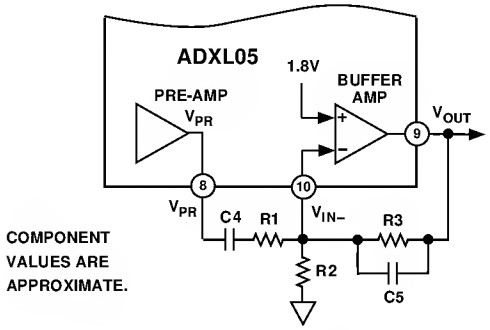

SCALE FACTOR IN mV/*g*	DESIRED LOW FREQUENCY LIMIT, F_L	R1 VALUE IN kΩ	CLOSEST C4 VALUE	DESIRED HIGH FREQUENCY LIMIT, F_H	R3 IN kΩ	CLOSEST C5 VALUE	VALUE OF R2 FOR +2.5V 0*g* LEVEL
1000	30	49.9	0.10µF	300	249	0.002µF	640kΩ
200	30	249	0.022µF	300	249	0.002µF	640kΩ
1000	3	49.9	1.0µF	100	249	0.0068µF	640kΩ
200	1	249	0.68µF	100	249	0.0068µF	640kΩ
200	0.1	249	6.8µF	10	249	0.068µF	640kΩ

Figure 27 AC Coupling and Low-Pass Filtering Used Together to Provide a Bandpass Function

Additional Noise Reduction Techniques

Shielded wire should be used for connecting the accelerometer to any circuitry that is more than a few inches away—to avoid 60 Hz pickup from ac line voltage. Ground the cable's shield at only one end and connect a separate common lead between the circuits; this will help to prevent ground loops. Also, if the accelerometer is inside a metal enclosure, this should be grounded as well.

Methods for Reducing 0 g Offset Drift

When using any accelerometer with a dc (gravity sensing) response, the 0 g offset level will exhibit some temperature drift. For very high accuracy applications, one very straightforward approach is to use a low cost crystal oven to maintain the accelerometer at a constant temperature. These ovens are available in a variety of different temperatures. After the circuit has been built and is operating correctly, the crystal oven can be mounted over the accelerometer and powered off the same +5 V power supply.

The ovens may be purchased from Isotemp Research, Inc., P.O. Box 3389, Charlottesville, VA 22903, phone 804-295-3101. For more details on crystal oven compensation, refer to application note AN-385.

Other methods for 0 g drift compensation include using a low cost temperature sensor such as the AD22100 to supply a microprocessor with the device temperature. If the drift curve of the accelerometer is stored in the μP, then a software program can be used to subtract out the drift. Alternatively, a simple 1st order (straight line) correction circuit can be used to subtract out the linear portion of the accelerometer's drift by using a temperature sensor and op amp to supply a small compensation current. For more details on software and hardware drift compensation, refer to application note AN-380.

ACCELEROMETER APPLICATIONS

Popular applications for low g accelerometers tend to fall into three categories: measurement of tilt and orientation, inertial measurement of acceleration, velocity and distance, and vibration or shock measurement.

The ADXL05 is a "dc" accelerometer, meaning that it is capable of measuring static accelerations such as the Earth's gravity. The ADXL05 differs from other acceleration measurement technologies such as piezoelectric and piezofilm sensors which can only respond to ac signals greater than approximately 1 Hz. This dc capability is required for tilt and inertial measurement. For ac shock or vibration the ADXL05 can measure frequencies of up to 4 kHz and has the added benefit of measuring all the way down to dc.

Using the ADXL05 in Tilt Applications

The ADXL05's precision dc characteristics make it suitable for tilt measurement. It can directly measure the Earth's gravity and use this constant force as a position reference to determine inclination. As shown in Figure 28, the accelerometer should be mounted so that its sensitive axis is perpendicular to the force of gravity, i.e., parallel to the Earth's surface. In this manner, it will be most sensitive to changes in orientation (when it is orientated 90° to the force of gravity). Its output can be then described by the sine function; a tilt occurring at an angle θ will cause a voltage output equal to:

$$V_{OUT} = \left[\text{Accelerometer Scale Factor}\left(\frac{V}{g}\right)\times\sin(\theta)\times 1g\right] + \text{zero g output}(V)$$

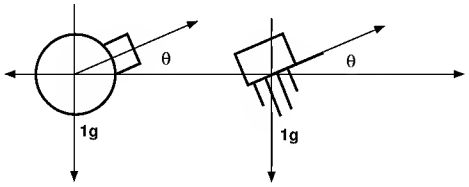

Figure 28. Two Possible Orientations for Tilt Measurement

Conversely, for a given acceleration signal and assuming no other changes in the axis or interfering signals, the tilt angle is proportional to the voltage output as shown in Figure 29. The angle, θ can be calculated using:

$$\theta = \arcsin\left(1g\times\left[\frac{V_{OUT} - \text{zero g output}(V)}{\text{Scale Factor}(V/g)}\right]\right)$$

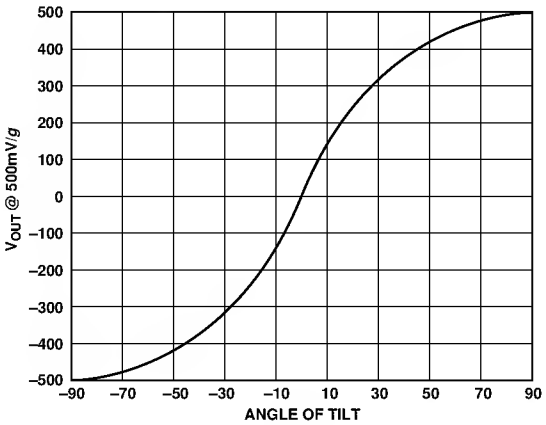

Figure 29. V_{OUT} vs. Tilt Angle

The use of an accelerometer in tilt applications has several advantages over the use of a traditional tilt sensor. A traditional tilt sensor consists of glass vial filled with a conductive liquid, typically a mercury or electrolytic solution. Besides being larger than an XL05, it requires additional signal conditioning circuitry. The settling time and frequency response is limited by the amount of time required for the liquid to stop sloshing around in the vial. In high vibration environments, or where high lateral accelerations may be present, it may not be possible to resolve the tilt signal above the "slosh" noise. The accelerometer has faster frequency (up to 50 ×) response and settling time. Interfering vibrations may be filtered out if necessary, an impossibility with a liquid tilt sensor, since one cannot filter the liquid. Finally, in the presence of lateral accelerations, an accelerometer provides more useful information, i.e., an acceleration signal, which if cleverly signal processed, can provide both a tilt and an acceleration output. A single accelerometer can be used to measure tilt over a 180° range; two accelerometers gives a complete 360° of measurement.

An important characteristic for an accelerometer used in a tilt application is its 0 g offset stability over temperature. The ADXL05 typically exhibits offsets that deviate no more than 0.1 g over the 0°C to +70°C temperature range, corresponding

to a 5° tilt error over the entire temperature range. Straightforward calibration schemes discussed in this data sheet may be used to reduce or compensate for temperature drift to improve the absolute accuracy of the measurement.

Using the ADXL05 in Inertial Measurement Applications

Inertial measurement refers to the practice of measuring acceleration for the purpose of determining the velocity of an object and its change in position, or distance traveled. This technique has previously required expensive inertial guidance systems of the type used in commercial aircraft and military systems. The availability of a low cost precision dc accelerometer such as the ADXL05 enables the use of inertial measurement for more cost sensitive industrial and commercial applications.

Inertial measurement makes use of the fact that the integral of acceleration is velocity and the integral of velocity is distance. By making careful measurements of acceleration and mathematically integrating the signals, one can determine both velocity and the distance traveled. The technique is useful for applications where a traditional speed and distance measurement is impractical, or where a non-contact, relative position measurement must be made.

A practical inertial measurement system uses multiple accelerometers to measure acceleration in three axes, and gyroscopes to measure rotation in three axes, the requirement for a 6 degree of freedom system. For simpler systems where one or more of the axes can be constrained, it is possible to build a system with fewer accelerometers and gyros.

The measurement system must take the acceleration sensor and calibrate out all static errors including any initial inaccuracy or temperature drift. A mathematical model is used to describe the performance of the sensor in order to calibrate it. If these errors are not removed, then the process of double integration will quickly cause any small error to dominate the result. Most practical systems use microprocessors for error correction and a temperature sensor for temperature drift compensation. Another approach is to maintain all of the sensors at a controlled temperature. The microprocessors have the additional advantage of providing a low cost method of performing the single and double integration of the acceleration signal.

The stability and repeatability of the accelerometer is the most important specification in an inertial system. The ADXL05 is "well behaved" that is, its response and temperature characteristics are easy to model and correct, and once modeled they are very repeatable. For example, temperature performance can be adequately modeled using first order, (straight line) approximations for most applications, and other errors such as on-axis and pendulous rectification are minimal. This greatly simplifies the math required to correct the sensor.

Vibration and Shock Measurement Applications

The ADXL05 can measure shocks and vibrations from dc to 4 kHz. Typical signal processing for vibration signals includes fast Fourier transforms, and single and double integration for velocity and displacement. It is possible to build a single integrator stage using the ADXL05's output buffer amplifier in order to provide a velocity output.

The sensitivity of the accelerometer will typically vary only ±0.5% over the full industrial temperature range, making it one of the most stable vibration measurement devices available. In vibration measurement applications, mechanical mounting and control of system and mounting resonances are critical to proper measurement. Refer to the application note AN-379, available from Analog Devices.

CALIBRATING THE ADXL05

If a calibrated shaker is not available, both the 0 g level and scale factor of the ADXL05 may be easily set to fair accuracy by using a self-calibration technique based on the 1 g (average) acceleration of the earth's gravity. Figure 30 shows how gravity and package orientation affect the ADXL05's output. Note that the output polarity is that which appears at V_{PR}; the output at V_{OUT} will have the opposite sign. With its axis of sensitivity in the vertical plane, the ADXL05 should register a 1 g acceleration, either positive or negative, depending on orientation. With the axis of sensitivity in the horizontal plane, no acceleration (the 0 g bias level) should be indicated.

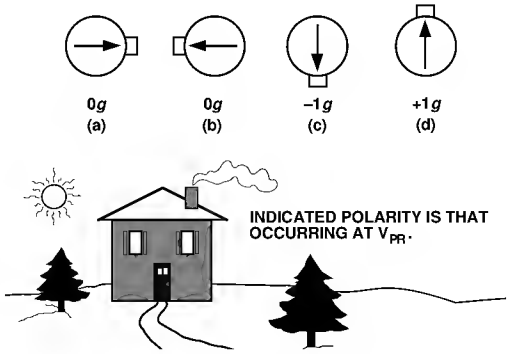

Figure 30. Using the Earth's Gravity to Self-Calibrate the ADXL05

To self-calibrate the ADXL05, place the accelerometer on its side with its axis of sensitivity oriented as shown in "a." The 0 g offset potentiometer, Rt, is then roughly adjusted for midscale: +2.5 V at the buffer output (see Figure 25).

Next, the package axis should be oriented as in "c" (pointing down) and the output reading noted. The package axis should then be rotated 180° to position "d" and the scale factor potentiometer, R1a, adjusted so that the output voltage indicates a change of 2 gs in acceleration. For example, if the circuit scale factor at the buffer output is 400 mV per g, then the scale factor trim should be adjusted so that an output change of 800 mV is indicated.

Adjusting the circuit's scale factor will have some effect on its 0 g level so this should be readjusted, as before, but this time checked in both positions "a" and "b." If there is a difference in the 0 g reading, a compromise setting should be selected so that the reading in each direction is equidistant from +2.5 V. Scale factor and 0 g offset adjustments should be repeated until both are correct.

REDUCING POWER CONSUMPTION

The use of a simple power cycling circuit provides a dramatic reduction in the ADXL05's average current consumption. In low bandwidth applications such as shipping recorders, this simple, low cost circuit can provide substantial power reduction.

If a microprocessor is available, only the circuit of Figure 31 is needed. The microprocessor supplies a TTL clock pulse to gate buffer transistor Q1 which inverts the output pulse from the µP

so that the duty cycle is correct when the pulse is re-inverted again by transistor, Q2, which cycles the accelerometer's supply voltage on and off.

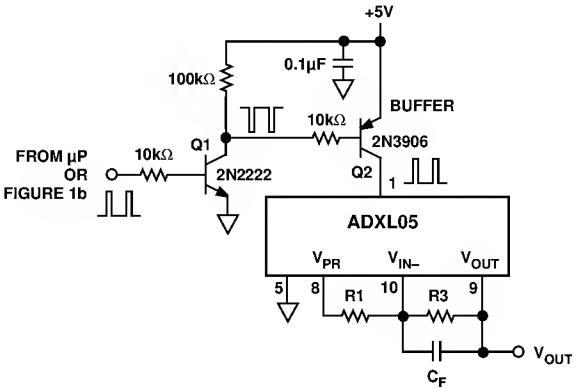

Figure 31. Basic Power Cycling Circuit

Figures 32 and 33 show typical waveforms of the accelerometer being operated with a 10% duty cycle: 1 ms on, 9 ms off. This reduces the average current consumption of the accelerometer from 8 mA to 800 µA, providing a power reduction of 90%. The µP should sample acceleration during the interval between the time the 0 g level has stabilized (≈ 400 µs using a 0.022 µF demod cap) and the end of the pulse duration. The measurement bandwidth of a power-cycled circuit will be set by the clock pulse rate and duty cycle. In this example, 1 sample can be taken every 10 ms which is 100 samples per second or 100 Hz. As defined by the "Nyquist criteria," the best case measurement bandwidth is $F_S/2$ or half the clock frequency. Therefore 50 Hz signals can be processed if adequate filtering is provided.

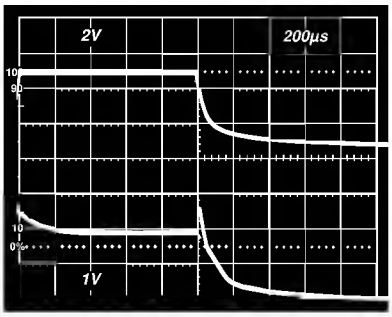

Figure 32. Top Trace: Voltage at Pin 1; Bottom Trace: Output at V_{PR}

Higher measurement bandwidths can be achieved by reducing the size of the demodulation capacitor below 0.022 µF and increasing the pulse frequency. A 0.01 µF capacitor was connected across the feedback resistor of the ADXL05 buffer to improve its transient characteristics. The optimum value for this capacitor will change with buffer gain and the cycling pulse rate. For more details, refer to application note AN-378.

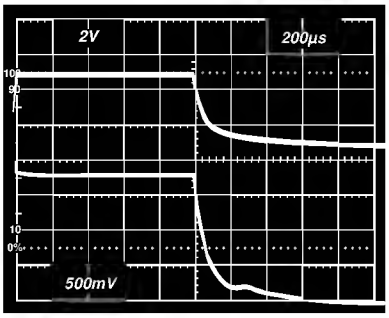

Figure 33. Top Trace: Voltage at Pin 1; Bottom Trace: Buffer Output With R1 =R3 =100 kΩ, C_F =0.01 µF

COMPONENT SELECTION

LOAD DRIVE CAPABILITIES OF THE V_{PR} AND BUFFER OUTPUTS

The V_{PR} and the buffer amplifier outputs are both capable of driving a load to voltage levels approaching that of the supply rail. However, both outputs are limited in how much current they can supply, affecting component selection.

V_{PR} Output

The V_{PR} pin has the ability to source current up to 500 µA but only has a sinking capability of 30 µA which limits its ability to drive loads. It is recommended that the buffer amplifier be used in most applications, to avoid loading down V_{PR}. In standard ±5 g applications, the resistor R1 from V_{PR} to V_{IN-} is recommended to have a value greater than 20 kΩ to reduce loading effects.

Capacitive loading of the V_{PR} pin should be minimized. A load capacitance between the V_{PR} pin and common will introduce an offset of approximately 1 mV for every 10 pF of load. The V_{PR} pin may be used to directly drive an A/D input or other source as long as these sensitivities are taken into account. It is always preferable to drive A/D converters or other sources using the buffer amplifier (or an external op amp) instead of the V_{PR} pin.

Buffer Amplifier Output

The buffer output can drive a load to within 0.25 V of either power supply rail and is capable of driving 1000 pF capacitive loads. Note that a capacitance connected across the buffer feedback resistor for low-pass filtering does not appear as a capacitive load to the buffer. The buffer amplifier is limited to sourcing or sinking a maximum of 100 µA. Component values for the resistor network should be selected to ensure that the buffer amplifier can drive the filter under worst case transient conditions.

Self-Test Function

The digital self-test input is compatible with both CMOS and TTL signals. A Logic "l" applied to the self-test (ST) input will cause an electrostatic force to be applied to the sensor which will cause it to deflect to the approximate negative full-scale output of the device. Accordingly, a correctly functioning accelerometer will respond by initiating an approximate –1 volt

output change at V_{PR}. If the ADXL05 is experiencing an acceleration when the self-test is initiated, the V_{PR} output will equal the algebraic sum of the two inputs. The output will stay at the self-test level as long as the ST input remains high and will return to the 0 g level when the ST voltage is removed.

A self-test output that varies more than ±15% from the nominal –1.0 V change indicates a defective beam or a circuit problem such as an open or shorted pin or component.

Operating the ADXL05's buffer amplifier at Gains > 2, to provide full-scale outputs of less than ±5 g, may cause the self-test output to overdrive the buffer into saturation. The self-test may still be used in the case, but the change in the output must then be monitored at the V_{PR} pin instead of the buffer output.

Note that the value of the self-test delta is not an exact indication of the sensitivity (mV/g) of the ADXL05 and, therefore, may not be used to calibrate the device for sensitivity error.

In critical applications, it may be desirable to monitor shifts in the zero-g bias voltage from its initial value. A shift in the 0 g bias level may indicate that the 0 g level has shifted which may warrant an alarm.

Power Supply Decoupling

The ADXL05 power supply should be decoupled with a 0.1 µF ceramic capacitor from +5 V pin of the ADXL05 to common using very short component leads. For other decoupling considerations, see EMI/RFI section.

Oscillator Decoupling Capacitor, C2

An oscillator decoupling capacitor, C2, is used to remove 1 MHz switching transients in the sensor excitation signal, and is required for proper operation of the ADXL05. A ceramic capacitor with a minimum value of 0.022 µF is recommended from the oscillator decoupling capacitor pin to common. Small amounts of capacitor leakage due to a dc resistance greater than 1 MΩ will not affect operation (i.e., a high quality capacitor is not needed here). As with the power supply bypass capacitor, very short component leads are recommended. Although 0.022 µF is a good typical value, it may be increased for reasons of convenience, but doing this will not improve the noise performance of the ADXL05.

Demodulator Capacitor, C1

The demodulator capacitor is connected across Pins 2 and 3 to set the bandwidth of the force balance control loop. This capacitor may be used to approximately set the bandwidth of the accelerometer. A capacitor is always required for proper operation.

The frequency response of the ADXL05 exhibits a single pole roll-off response, see Figure 4.

A nominal value of 0.022 µF is recommended for C1. In general, the design bandwidth should be set 40% higher than the minimum desired system bandwidth due to the ±40% tolerance, to preserve stability C1 should be kept > 0.01 µF.

The demodulation capacitor should be a low leakage, low drift ceramic type with an NPO (best) or X7R (good) dielectric.

In general, it's best to use the recommended 0.022 µF capacitor across the demodulator pins and perform any additional low-pass filtering using the buffer amplifier. The use of the buffer for low-pass filtering generally results in smaller capacitance values and better overall performance. It is also a convenient and more precise way to set the system bandwidth. Post filtering allows bandwidth to be controlled accurately by component selection and avoids the ±40% demodulation tolerance. Note that signal noise is proportional to the square root of the bandwidth of the ADXL05 and may be a consideration in component selection—see section on noise.

Care should be taken to reduce or eliminate any leakage paths from the demodulator capacitor pins to common or to the +5 V pin. Even a small imbalance in the leakage paths from these pins will result in offset shifts in the zero-g bias level. As an example, an unbalanced parasitic resistance of 30 MΩ from either demodulator pin to ground will result in an offset shift at V_{PR} of approximately 50 mV. Conformal coating of PC boards with a high impedance material is recommended to avoid leakage problems due to aging or moisture.

MINIMIZING EMI/RFI

The architecture of the ADXL05 and its use of synchronous demodulation make the device immune to most electromagnetic (EMI) and radio frequency (RFI) interference. The use of synchronous demodulation allows the circuit to reject all signals except those at the frequency of the oscillator driving the sensor element. However, the ADXL05 does have a sensitivity to RFI that is within ±5 kHz of the internal oscillator's nominal frequency of 1 MHz and also to any odd harmonics of this frequency. The internal oscillator frequency will exhibit part to part variation in the range of 0.5 MHz to 1.4 MHz.

In general the effect is difficult to notice as the interference must match the internal oscillator within ±5 kHz and must be large in amplitude. For example: a 1 MHz interference signal of 20 mV p-p applied to the +5 V power supply pin will produce a 200 mV p-p signal at the V_{PR} pin if the internal oscillator and interference signals are matched exactly or at odd harmonics. If the same 20 mV interference is applied but 5 kHz above or below the internal oscillator's frequency, the signal level at V_{PR} will only be 20 mV p-p in amplitude.

Power supply decoupling, short component leads (especially for capacitors C1 and C2), physically small (surface mount, etc.) components and attention to good grounding practices all help to prevent RFI and EMI problems. Good grounding practices include having separate analog and digital grounds (as well as separate power supplies or very good decoupling) on the printed circuit boards. A single ground line shared by both the digital and analog circuitry can lead to digital pulses (and clock signals) interfering with the sensor's onboard oscillator. In extreme cases, a low cost radio frequency choke (≈10 µH) may be needed in series with the accelerometer's power supply pin. This, together with the recommended 0.1 µF power supply bypass capacitor, will form an effective RF filter. The use of an RF choke is preferred over a resistor since any series resistance in the power supply will "unregulate" the device from the supply, degrade its power supply rejection and reduce its supply voltage.

OUTLINE DIMENSIONS

Dimensions shown in inches and (mm).

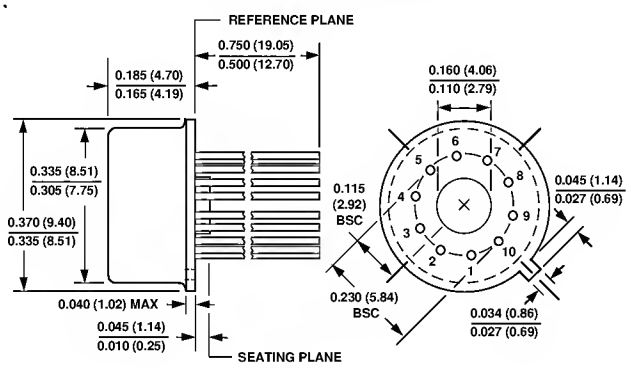

C2028b–5–3/96

PRINTED IN U.S.A.